HIRSCHMANN
A BELDEN BRAND

Product: GDM3109-A0U-10F

GDM Standard- 175301-803 (DIN 43650), Form A, 18mm, 3 Pole+Ground (Protective Earth), PG9, Black Housing, without circuitry, 250V | 16 A, Steel Center Screw, Bulk Packaging

Product Description

GDM Standard- 175301-803 (DIN 43650), Form A, 18mm, 3 Pole+Ground (Protective Earth), PG9, Black Housing, without circuitry, 250V | 16 A, Steel Center Screw, Bulk Packaging

Technical Drawing

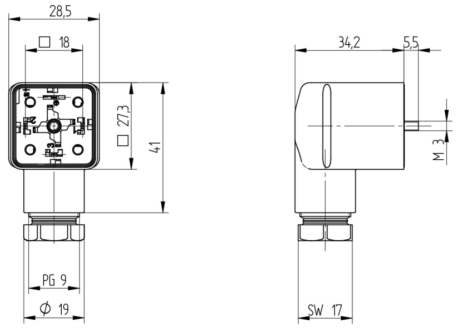

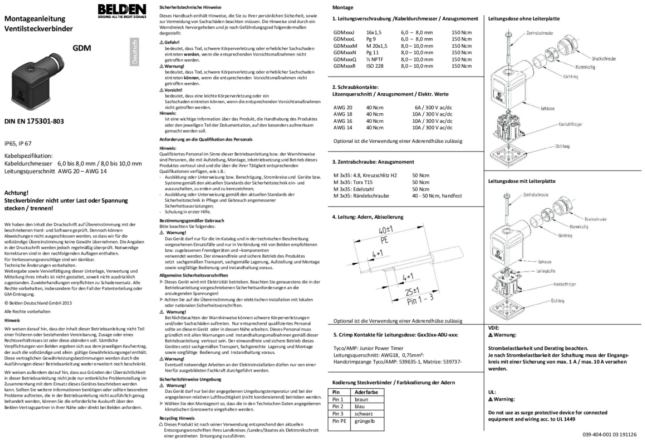

Montageanleitung
Ventilsteckverbinder

GDM

DIN EN 175301-803

IP65, IP 67

Kabelspezifikation:
Kabeldurchmesser 6,0 bis 8,0 mm / 8,0 bis 10,0 mm
Leitungsquerschnitt AWG 20 – AWG 14

Achtung!
Steckverbinder nicht unter Last oder Spannung stecken / trennen!

Montage

1. Leitungsverschraubung /Kabeldurchmesser / Anzugsmoment

GDMxxxL	Sw L1	6,0 – 8,0 mm	150 Ncm
GDMxxxL	Pg 9	6,0 – 8,0 mm	150 Ncm
GDMxxxM	M 20x1,5	8,0 – 10,0 mm	150 Ncm
GDMxxxN	Pg 11	8,0 – 10,0 mm	150 Ncm
GDMxxxQ	½ NPTF	8,0 – 10,0 mm	150 Ncm
GDMxxxR	ISO 228	8,0 – 10,0 mm	150 Ncm

2. Schraubkontakte:
Litzenquerschnitt / Anzugsmoment / Elektr. Werte

AWG 20	40 Ncm	6A / 300 V ac/dc
AWG 18	40 Ncm	10A / 300 V ac/dc
AWG 16	40 Ncm	10A / 300 V ac/dc
AWG 14	40 Ncm	10A / 300 V ac/dc

Optional ist die Verwendung einer Adernendhülse zulässig

3. Zentralschraube: Anzugsmoment

M 3x35: 4.8, Kreuzschlitz H2	50 Ncm
M 3x35: Torx T15	50 Ncm
M 3x35: Edelstahl	50 Ncm
M 3x35: Rändelschraube	40 - 50 Ncm, handfest

4. Leitung: Adern, Abisolierung

Optional ist die Verwendung einer Adernendhülse zulässig

5. Crimp Kontakte für Leitungsdose: GeeLine-A0U-xxx:

Tyco/AMP: Junior Power Timer
Leitungsquerschnitt: AWG18, 0,75mm²
Handcrimpzange: Tyco/AMP: 539635-1, Matrizen: 539737-

Kodierung Steckverbinder / Farbkodierung der Adern

Pin	Aderfarbe
Pin 1	braun
Pin 2	blau
Pin 3	schwarz
Pin PE	grün/gelb

Leitungsdose ohne Leiterplatte

Leitungsdose mit Leiterplatte

VDE:
⚠ Warnung:
Strombelastbarkeit und Derating beachten.
Je nach Strombelastbarkeit der Schaltung muss der Eingangskreis mit einer Sicherung von max. 1 A / max. 10 A versehen werden.

UL:
⚠ Warnung:
Do not use as surge protective device for connected equipment and wiring acc. to UL 1449

039-404-001 03 191126

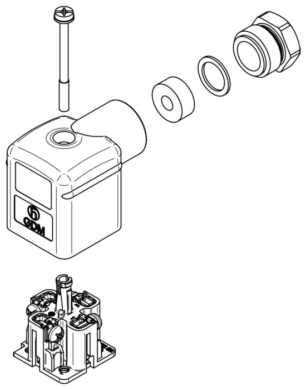

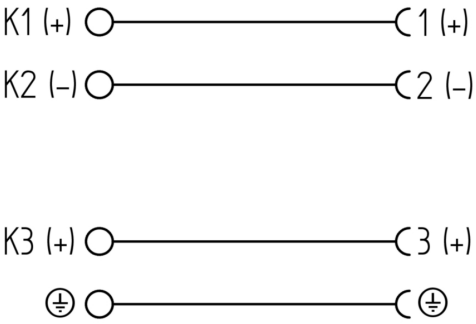

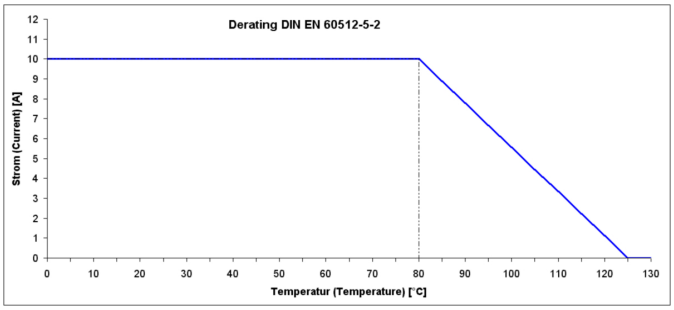

Technical Specifications

Technical Data

Product Family:	Valve Connectors
Product Sub Family:	GDM Standard
Brand:	Hirschmann
Connector Type:	Field Attachable
Type of Contact / Gender:	Female
Connector Design:	Angled
Number of Pins:	3+PE (PE across cable outlet)
Coding:	A
Shielding:	Unshielded
Attachment Type:	Central Screw
Replacement for:	ID: 931969100 Name: GDM 3009 schwarz
Rated Voltage:	250 V
Rated Impulse Voltage:	4.0 kV
Operating Voltage:	230 V AC/DC
Rated Current*:	16 A
Contact Resistance:	≤ 10 mOhm
Insulation Resistance:	> 10^9 Ohm
Mating Cycles:	≤ 50
Type of Connection:	Screw
Cable Gland:	PG9
Conductor Cross Section:	0.25 - 1.5 mm²
Suitable Cables:	Ø 4.5 - 9 mm
Ambient Temperature (Operation)*:	-40°C to +125°C
Protection Degree / IP Rating**:	IP65
Design Standard:	DIN EN 175301-803-A, ISO 4400
Pollution Degree:	3 acc. to DIN EN 60664-1 (VDE 0110-1)
Clearance / Creepage Distance:	DIN EN 60664-1 (2008/01); VDE 0110-1
Overvoltage Category:	III acc. to DIN EN 60664-1 (VDE 0110-1)

Materials

Contact Base Material:	CuZn
Contact Plating:	Cu/Sn
Contact Bearer Material:	PA GF
Contact Bearer Color:	Black
Flammability Class (Contact Bearer):	UL 94 HB
Housing Material:	PA GF
Housing Color:	Black
Flammability Class (Housing):	UL 94 HB
Cable Gland Material:	PA GF
Cable Gland Gasket:	NBR
Cable Gland Color:	Black
Attachment Material:	Steel, Philips combi slot
Gasket Material:	Sold separately

Additional Technical Data

Fastening Torque (Contact Screw):	(40-50) Ncm for conductor size 0.5 - 1.5 mm²; (30-40) Ncm for conductor size 0.38-0.34 mm²; (25-30) Ncm for conductor size 0.25 mm²
Fastening Torque (Cable Gland):	(250-375) Ncm
Fastening Torque (Attachment):	(50-60) Ncm

Approvals

VDE:	Yes
SEV:	Yes

Safety & Environmental Compliance

RoHS Compliant:	Yes

Notes

Note Derating:	Notice derating
Protection Degree / IP Rating Note:	** only if mounted and locked in combination with Hirschmann / Lumberg Automation connector.
Note:	Do not connect or disconnect under load.

Variants

Item #	Item Description	Central Screw	Gasket	Packaging	Replacement For
934888105	GDM3109-A0U-10F	1- SteelScrew, Combi Head	0 - Sold Seperately	F - Collect packaging 200 pieces, assembled	ID: 931969100 Name: GDM 3009 black

© 2024 Belden, Inc

All Rights Reserved.

Although Belden makes every reasonable effort to ensure their accuracy at the time of this publication, information and specifications described here in are subject to error or omission and to change without notice, and the listing of such information and specifications does not ensure product availability.

Belden provides the information and specifications herein on an "ASIS" basis, with no representations or warranties, whether express, statutory or implied. In no event will Belden be liable for any damages (including consequential, indirect, incidental, special, punitive, or exemplary damages) whatsoever, even if Belden has been advised of the possibility of such damages, whether in an action under contract, negligence or any other theory, arising out of or in connection with the use, or inability to use, the information or specifications described herein.

All sales of Belden products are subject to Belden's standard terms and conditions of sale.

Belden believes this product to be in compliance with all applicable environmental programs as listed in the data sheet. The information provided is correct to the best of Belden's knowledge, information and belief at the date of its publication. This information is designed only as a general guide for the safe handling, storage, and any other operation of the product itself or the one that it becomes a part of. The Product Disclosure is not to be considered a warranty or quality specification. Regulatory information is for guidance purposes only. Product users are responsible for determining the applicability of legislation and regulations based on their individual usage of the product.