EDAB2xxx – Bases for Cabinets E-series cabinet

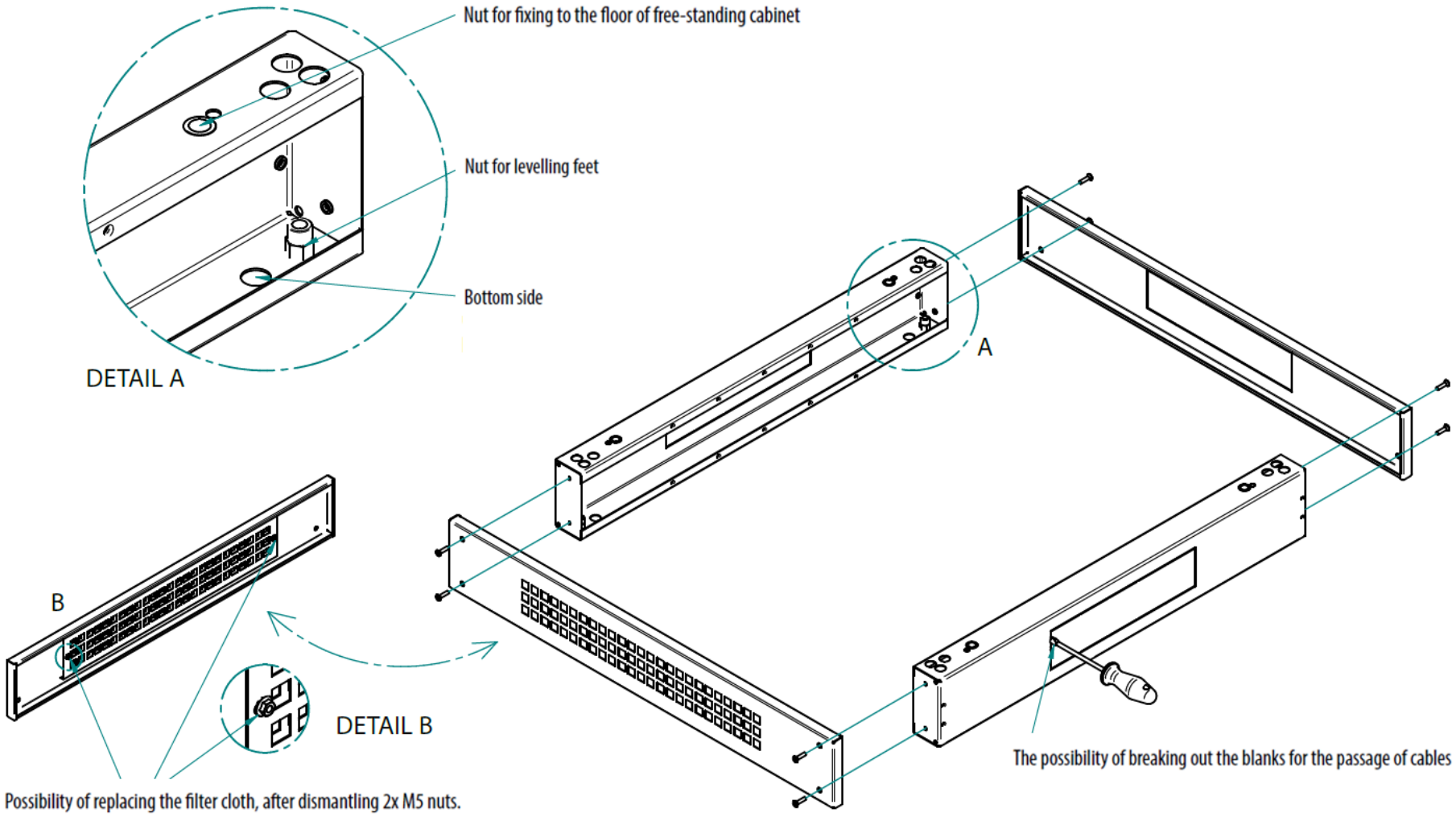

© Copyright 2024, Belden Wire & Cable B.V. The Netherlands • E-mail: Venlo.Techsupport@Belden.com
All rights are reserved. Reproduction in whole or in part is prohibited without the written consent of the copyright owner.
All printing errors are subject to correction. Technical specifications are subject to change without notice.

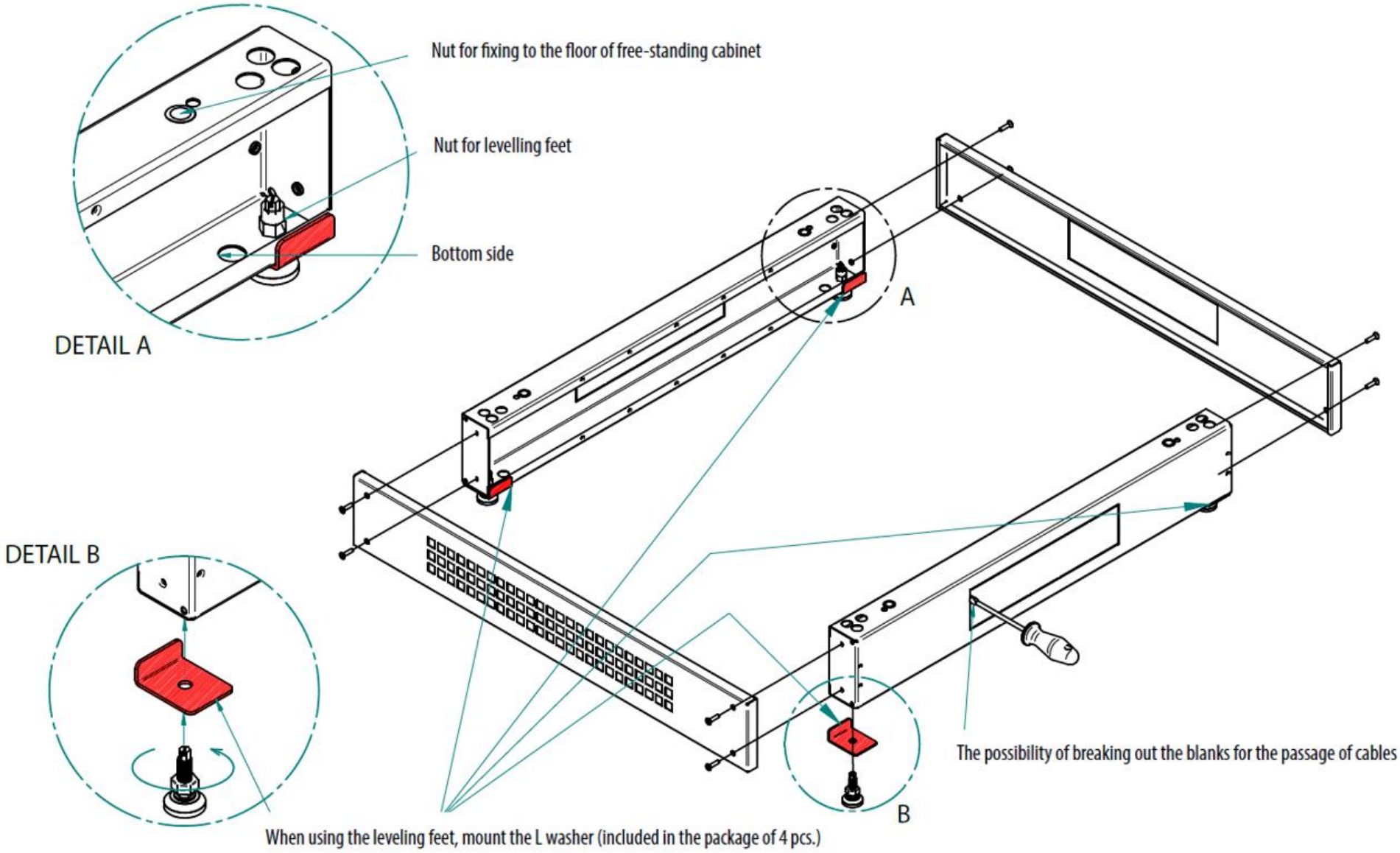

© Copyright 2024, Belden Wire & Cable B.V. The Netherlands • E-mail: Venlo.Techsupport@Belden.com
All rights are reserved. Reproduction in whole or in part is prohibited without the written consent of the copyright owner.
All printing errors are subject to correction. Technical specifications are subject to change without notice.